25mm SINGLE BRACKETS

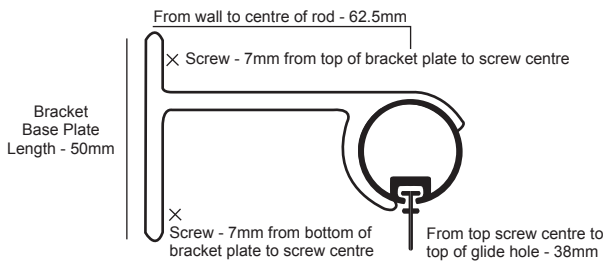

25mm Glide Bracket M3 (New Style)

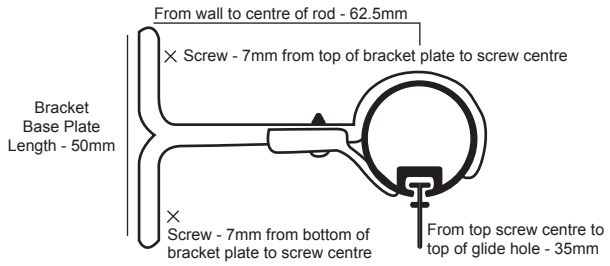

25mm Glide Bracket M1 (Old Style)

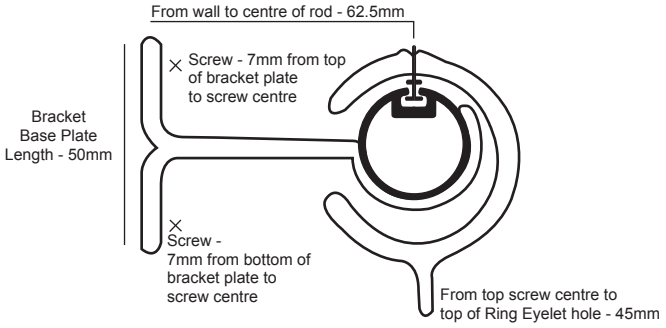

25mm Ring Bracket

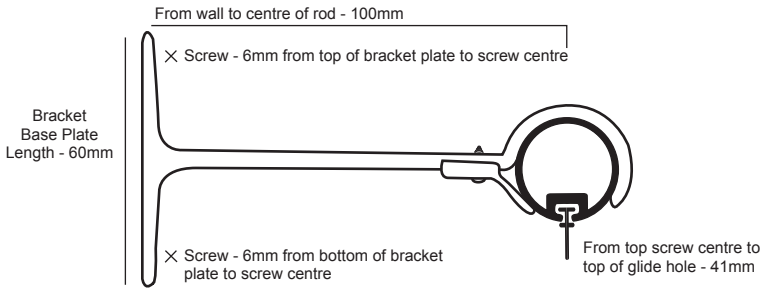

25mm (100mm) Glide Bracket

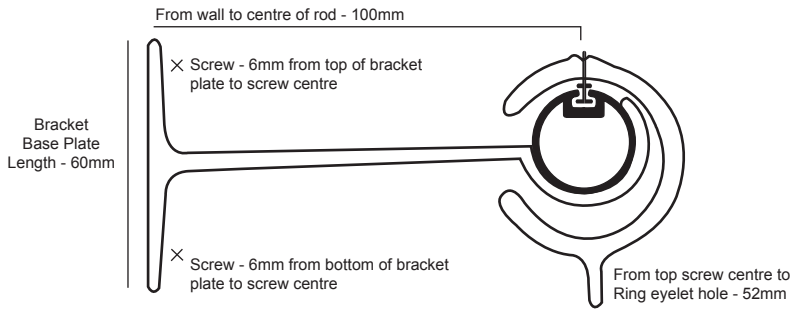

25mm (100mm) Ring Bracket